Instructions

Modular Box Lubricator

3A2100C

EN

Fluid container used with GBL7500 Suction Fed, Gravity Fed or Pressure Fed Box Lubricator Pumps used for dispensing non-corrosive and non-abrasive oils and lubricants. For professional use only.

See Technical Data, page 13 for maximum outlet pressures per pump station.

Important Safety Instructions
Read all warnings and instructions in this manual and your pump instruction manual. Save all instructions.

See page 2 for part number information.

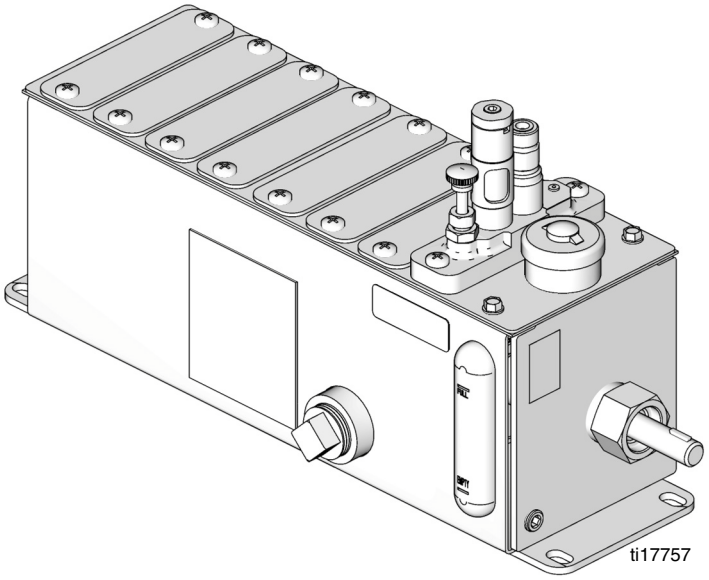

PROVEN QUALITY. LEADING TECHNOLOGY.

Part Number

Use the Part Number Key provided below to identify each system component. The Code for each Option that makes up the Part Number are provided in the tables below. For example, MBB1DE is a Modular Box; 6 pint reservoir, (maximum of 3 pumping stations and no motor mount base); 3/16 suction fed pump; 3 pumps; and a direct end rotary drive.

NOTE: Some pump configurations are not available. Contact Graco Customer Service or your local Graco distributor for assistance.

Part Key: **M B A - B - C - D**

Part Example: **M B B - 1 - D - E**

MB = Identifies pump as Graco MB part

Option A: Reservoir Size and Motor Mount Base

Code	Reservoir Size: pints (liters)	Max Number of Pump Stations	Motor Mount Base
A	4 (1.89)	2	NA
B	6 (2.84)	3	NA
C	8 (3.79)	5	NA
D	12 (5.68)	8	NA
E	16 (7.57)	12	NA
F	24 (11.36)	16	NA
G	32 (15.14)	20	NA
H	40 (18.93)	24	NA
J	4 (1.89)	2	X
K	6 (2.84)	3	X
L	8 (3.79)	5	X
M	12 (5.68)	8	X
N	16 (7.57)	12	X
P	24 (11.36)	16	X
R	32 (15.14)	20	X
S	40 (18.93)	24	X

Option B: GBL7500 Pump and Level Controller

Code	Description
0◆	No Pump
1◆	3/16 Suction Fed Pump
2◆	1/4 Suction Fed Pump
3◆	3/8 Suction Fed Pump
4	3/16 Suction Fed Pump with RENS Level Controller
5	1/4 Suction Fed Pump with RENS Level Controller
6	3/8 Suction Fed Pump with RENS Level Controller
7	3/16 Suction Fed Pump with GARZO Level Controller (Class 1, Group D)
8	1/4 Suction Fed Pump with GARZO Level Controller (Class 1, Group D)
9	3/8 Suction Fed Pump with GARZO Level Controller (Class 1, Group D)

Option C: Pump Quantity

Code	Quantity	Code	Quantity
A	0	N	12
B	1	P	13
C	2	R	14
D	3	S	15
E	4	T	16
F	5	U	17
G	6	V	18
H	7	W	19
J	8	X	20
K	9	Y	21
L	10	Z	22
M	11		

Option D: Drive Type

Code	Description	Drive Side	
		Left	Right
A◆	Direct end rotary		X
B	End ratchet (w/out drive arm) - 800 rpm max input		X
C	End rotary ratchet 37.5:1 - 800 rpm max input		X
D	End rotary ratchet, 75:1 - 800 rpm max input		X
E◆	Direct end rotary	X	
F	End ratchet (w/out drive arm) - 800 rpm max input	X	
G	End rotary ratchet 37.5:1 - 800 rpm max input	X	
H	End rotary ratchet, 75:1 - 800 rpm max input	X	
J	Double reduction end rotary, 25:1		X
K	Double reduction end rotary, 50:1		X
L	Double reduction end rotary, 100:1		X
M	Double reduction end rotary, 200:1		X
N	Double reduction end rotary, 400:1		X
P	Right angle rotary 25:1		X
R	Right angle rotary 50:1		X
S	Right angle rotary 188:1		X
T	Right angle rotary 375:1		X
U	100:1 ratio gear reducer		X
V	150:1 ratio gear reducer		X
W	200:1 ratio gear reducer		X
X	300:1 ratio gear reducer		X
Y	400:1 ratio gear reducer		X
Z	Left angle rotary 188:1	X	

◆ Configurations containing these selections from both Option B and Option D are CE and Atex certified.

CE Ex II 2 G cT6

Warnings

The following warnings are for the setup, use, grounding, maintenance, and repair of this equipment. The exclamation point symbol alerts you to a general warning and the hazard symbols refer to procedure-specific risks. When these symbols appear in the body of this manual, refer back to these Warnings. Product-specific hazard symbols and warnings not covered in this section may appear throughout the body of this manual where applicable.

WARNING

FIRE AND EXPLOSION HAZARD

When flammable fluids are present in the work area, such as gasoline and windshield wiper fluid, be aware that flammable fumes can ignite or explode. To help prevent fire and explosion:

- Use equipment only in well ventilated area.
- Eliminate all ignition sources, such as cigarettes and portable electric lamps.
- Keep work area free of debris, including rags and spilled or open containers of solvent and gasoline.
- Do not plug or unplug power cords or turn lights on or off when flammable fumes are present.
- Ground all equipment in the work area.
- Use only grounded hoses.
- **Stop operation immediately** if static sparking occurs or you feel a shock**.** Do not use equipment until you identify and correct the problem.
- Keep a working fire extinguisher in the work area.

SKIN INJECTION HAZARD

High-pressure fluid from dispensing device, hose leaks, or ruptured components will pierce skin. This may look like just a cut, but it is a serious injury that can result in amputation. **Get immediate surgical treatment.**

- Do not point dispensing device at anyone or at any part of the body.
- Do not put your hand over the fluid outlet.
- Do not stop or deflect leaks with your hand, body, glove, or rag.
- Follow the **Pressure Relief Procedure** when you stop dispensing and before cleaning, checking, or servicing equipment.
- Tighten all fluid connections before operating the equipment.
- Check hoses and couplings daily. Replace worn or damaged parts immediately.

WARNING

EQUIPMENT MISUSE HAZARD

Misuse can cause death or serious injury.

- Do not operate the unit when fatigued or under the influence of drugs or alcohol.
- Do not exceed the maximum working pressure or temperature rating of the lowest rated system component. See **Technical Data** in all equipment manuals.
- Use fluids and solvents that are compatible with equipment wetted parts. See Technical Data in all equipment manuals. Read fluid and solvent manufacturer's warnings. For complete information about your material, request MSDS from distributor or retailer.
- Do not leave the work area while equipment is energized or under pressure.
- Turn off all equipment and follow the **Pressure Relief Procedure** when equipment is not in use.
- Check equipment daily. Repair or replace worn or damaged parts immediately with genuine manufacturer's replacement parts only.
- Do not alter or modify equipment. Alterations or modifications may void agency approvals and create safety hazards.
- Make sure all equipment is rated and approved for the environment in which you are using it.
- Use equipment only for its intended purpose. Call your distributor for information.
- Route hoses and cables away from traffic areas, sharp edges, moving parts, and hot surfaces.
- Do not kink or over bend hoses or use hoses to pull equipment.
- Keep children and animals away from work area.
- Comply with all applicable safety regulations.

MOVING PARTS HAZARD

Moving parts can pinch, cut or amputate fingers and other body parts.

- Keep clear of moving parts.
- Do not operate equipment with protective guards or covers removed.
- Pressurized equipment can start without warning. Before checking, moving, or servicing equipment, follow the **Pressure Relief Procedure** and disconnect all power sources.

PERSONAL PROTECTIVE EQUIPMENT

Wear appropriate protective equipment when in the work area to help prevent serious injury, including eye injury, hearing loss, inhalation of toxic fumes, and burns. This protective equipment includes but is not limited to:

- Protective eye wear, and hearing protection.
- Respirators, protective clothing, and gloves as recommended by the fluid and solvent manufacturer.

Installation

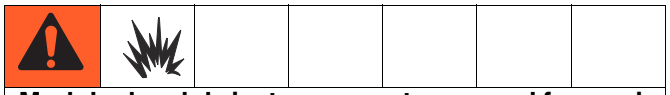

Modular box lubricators are not approved for use in hazardous locations or explosive atmospheres unless all accessories, components and wiring meet all local and national codes.

Component Identification

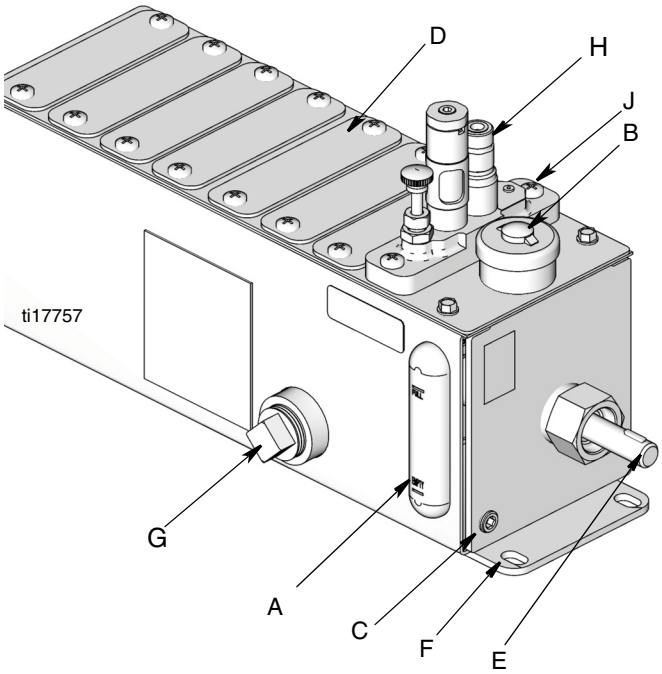

FIG. 1

Key:

A Site glass
B Fill cap
C Drain plug
D Pump blank
E Drive shaft - (with woodruff key)
F Mounting holes
G Accessory plug (heater port)
H Pump (not on all models)*
J Mounting screw

**The GBL7500 Box Lubricator Pump and GBL Shaft Rotation/Low Level Alarm Pump are available from Graco. See Accessories/Other Accessories, page 12 for information about these pump models and the related instruction manual.*

Grounding

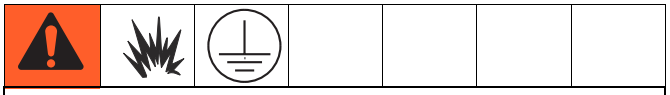

The equipment must be grounded to reduce the risk of static sparking. Static sparking can cause fumes to ignite or explode. Grounding provides an escape wire for the electric current.

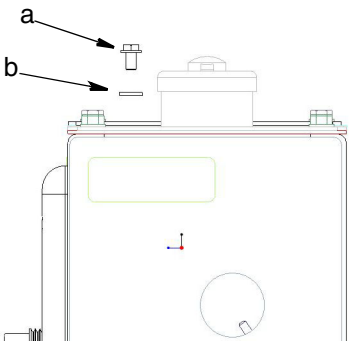

FIG. 2

1. Loosen grounding screw (a) (FIG. 2) and place one end of a 12 gauge (1.5mm) minimum ground wire between the grounding screw and washer (b).
2. Tighten grounding screw (a) securely.
3. Connect other end of wire to a true earth ground.

Installation Procedure

Reference letters used in the following instructions, refer to FIG. 1.

1. Select a mounting surface that satisfies the following:
   - Is able to support the weight of the reservoir and fluid when filled to capacity.

     NOTE: When possible, mount to a surface that experiences little or no vibration.
   - Allows easy access to the lubricator for filling the reservoir and periodic maintenance.
   - The lubricator must be connected to a ground source.
2. Install reservoir to the mounting surface. See mounting hole layout in the Reservoir and Mounting Dimension section of this manual, page 14.
3. Install bolts through holes (F) in reservoir mounting bracket and tighten securely.

4. Remove fill cap (B) and fill reservoir with clean, filtered fluid until it reaches the full line on the sight glass.

   NOTE:
   - Filter oil with a minimum 25 micron strainer. Depending on machine requirements it may be necessary to maintain a higher cleanliness level.
   - A pump blank is provided to install over all unused pump stations.
   - Refer to pump instruction manual for pump ***installation and priming*** instructions. (See page 12 for Graco pump model information.)

Drive Mechanism

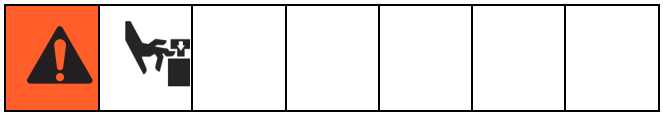

A 5/8 in. diameter shaft is provided to connect the lubricator to a rotary power source. A woodruff key and key way on the shaft are provided to aid in connecting this source.

Install protective guards around all drive components upon installation.

Notice
The recommended speed of the box lubricator cam shaft is 3 - 50 rpm. Do not exceed the maximum value of 50 rpm to avoid pump damage.

Refilling the Reservoir

When necessary, fill the lubricator reservoir with clean filtered lubricant until it reaches the fill line on the sight glass. A sight level gauge is provided on the reservoir to monitor the fluid level. The oil level should not be allowed to drop below the line indicating an empty reservoir.

Pressure Relief Procedure

Follow the Pressure Relief Procedure whenever you see this symbol.

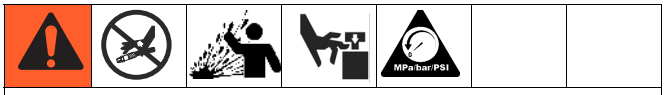

This equipment stays pressurized until pressure is manually relieved. To help prevent serious injury from pressurized fluid, such as skin injection, splashing fluid and moving parts, follow the Pressure Relief Procedure in your pump manual when you stop dispensing and before cleaning, checking, or servicing the equipment.

1. Stop lube pump.
2. If installed, close oil supply valve located upstream from pump.
3. If installed, open drain valve located downstream from the pump.
4. Slowly crack open fluid line fittings to relieve pressure.

Service/Maintenance

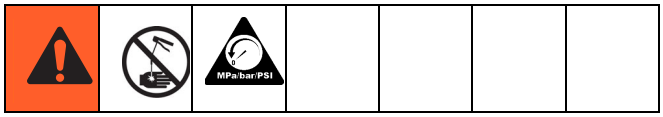

1. Follow the **Pressure Relief Procedure** before performing any service procedures.
2. Lubricator operation can be checked by observing the drip tube located within the sight glass well of your pump.
   - If the correct pumping rate is maintained, no servicing is required other than periodic replenishment of the reservoir.
   - If the sight glass well pumps dry or no flow is observed refer to the Troubleshooting Section, page 8.
3. Inspect box for worn or damaged components. Replace as necessary.

4. Clean lubricator periodically to eliminate contamination that may have occurred in the oil. To accomplish this:

   a. Drain reservoir by removing drain plug (C) (FIG. 1). Dispose of oil according to all applicable safety regulations.

   b. Remove all pumping units.

   c. Clean the pumps and reservoir by brushing loose all foreign matter, dipping in solvent and blowing dry with compressed air.

   d. Replace pumping units. Torque mounting screws (J) to 110 in. lbs ± 10 in. lbs. (12.43 N.m ± 1.13 N.m).

   e. Apply thread sealant (user supplied) to drain plug (C) (FIG. 1) and replace. Torque to 35 in. lbs ± 5 in. lbs. (3.95 N.m ± 0.6 N.m).

   f. Fill reservoir. (See Refilling the Reservoir, page 6).

Troubleshooting

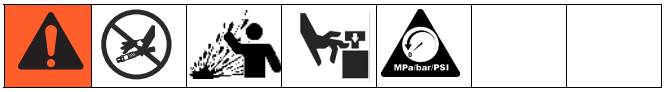

Problem	Cause	Solution
Sight well pumps dry	Low oil level in reservoir	Add oil. See Refilling the Reservoir, page 6.
	Pump issue	Refer to the Troubleshooting Section of your pump instruction manual.
No flow from pump outputs	Low oil level in reservoir	Add oil. See Refilling the Reservoir, page 6.
	Camshaft not rotating because rotatory power source is defective	Replace rotary power source.
	Camshaft not rotating because rotatory power source connection is defective	Fix rotary power source connection to lubricator box.
	Broken camshaft	Replace lubricator box.
	Pump issue	Refer to the Troubleshooting Section of your pump instruction manual.
Leaking from under pump	Defective gasket	Replace gasket.
Leaking from reservoir accessory plug	Insufficient thread sealant	Clean and replace thread sealant (user supplied).
Leaking from reservoir drain plug		

Bare Box Parts

Model: MBD0AA Shown

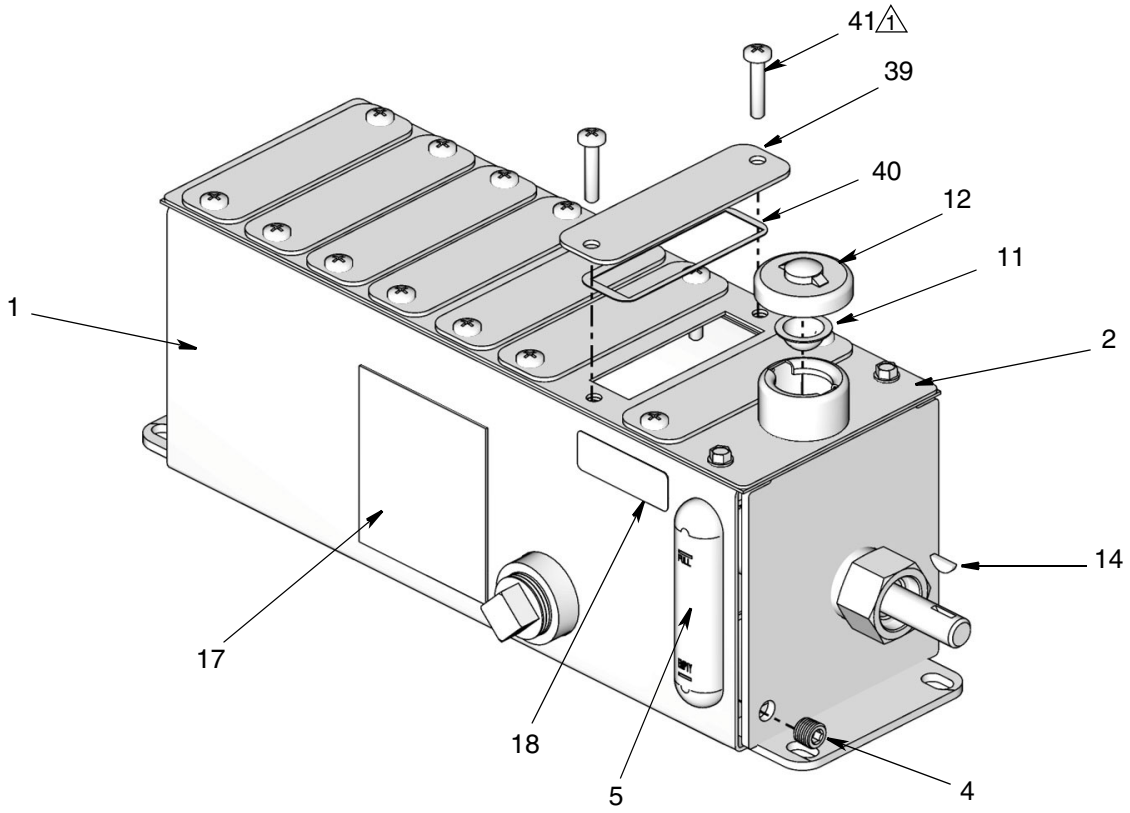

⚠1 Torque to 110 in. lbs ± 10 in. lbs. (12.43 N.m ± 1.13 N.m)

Ref	Part No.	Description	Qty
1		RESERVOIR	1
2		COVER, assembly	1
4	557391	PLUG, dry seal, 1/4 NPTF	2
5		SIGHTGLASS, level	1
11	557149	STRAINER, filter	1
12	557171	COVER, oil, hole	1
14	555377	KEY, #3 USA 404 Woodruff	
	556368	KEY, #5 USA 405 Woodruff	1
17▲	16G243	LABEL, warning, CE & Atex Models	1
	16P808	LABEL, warning, not CE or Atex	1
18	16P807	LABEL, max working pressure	1
39	557128	PLATE, blankoff	*
40	556732	GASKET	*
41	119426	SCREW, mach, hex washer hd	*

* See Part Numbers, page 2 for quantity.

▲ *Replacement Danger and Warning labels, tags, and cards are available at no cost.*

Accessories

Modular box lubricators are not approved for use in hazardous locations or explosive atmospheres unless all accessories, components and wiring meet all local and national codes.

Pumps* - CE and ATEX certified

Part No.	Description	Special Features / Notes
24J391	3/16 in. Suction Fed Pump	Available as a configured option. See Option B, page 2.
24J392	1/4 in. Suction Fed Pump	Available as a configured option. See Option B, page 2.
24J393	3/8 in. Suction Fed Pump	Available as a configured option. See Option B, page 2.
24J394	3/16 in. Gravity Fed Pump	Not available as a configured option.
24J395	1/4 in. Gravity Fed Pump	Not available as a configured option.
24J396	3/8 in. Gravity Fed Pump	Not available as a configured option.
24J397	3/16 in. Pressure Fed Pump	Not available as a configured option.
24J398	1/4 in. Pressure Fed Pump	Not available as a configured option.
24J399	3/8 in. Pressure Fed Pump	Not available as a configured option.
24K466	Alarm Pump	Not available as a configured option.
		Senses shaft rotation and oil level.
		Pressure switch operation is dependent upon shaft rotation and adequate oil level. **NOTE:** Pressure switch is not included.

**See pump instruction manual 3A2257.*

Motors

Part No.	Horse Power	RPM	Voltage	Hertz	Phase	Insulation	Type	Duty	Enclosure	Frame	Special Features
557270	1/2	1725	230/460	60	3	Class B	Polyphase	Continuous	TENV	56C	NEMA B Ball Bearings
557271	1/2	1725	115/230	60	1	Class B	Capacitor Start	Continuous	TEFC	56C	NEMA B Ball Bearings
558289	1/4	1725	115/230	60	1	Class B	Capacitor Start	Continuous	TENV	56	NEMA B Ball Bearings Non-Ventilated
558290	1/4	1725	230/460	60	3	Class F	Polyphase		TENV	FB56	
558291	1/2	1725	230/460	60	3	Class B	Polyphase	Continuous	XPFC	56C	NEMA B Ball Bearings Explosion Proof Class 1 Group D
558292	1/3	1725	230/460	60	3	Class A	Polyphase	Continuous		56	Explosion Proof Class 1 Group D Non-Ventilated NEMA B Ball Bearings
558293	1/3	1725	115/230	60	1	Class B	Capacitor Start	Continuous	TENV	56	Explosion Proof Class 1 Group D NEMA B Ball Bearings
558294	1/2	1725	115/230	60	1	Class FJ	Capacitor Start	Continuous			Explosion Proof Class 1 Group C & D Explosion Proof Class 2 Group F & G Outdoor & Chemical Duty (SXT) Fan Cooled Tropical Insulation (Anti-Fungus)
558295	1/2	1725	230/460	60	3	Class BJ	Polyphase	Continuous		56C	Explosion Proof Class 1 Group C & D Explosion Proof Class 2 Group F & G Outdoor & Chemical Duty (SXT) Fan Cooled Tropical Insulation (Anti-Fungus) Thermal Overload Protected Temperature Class T3C

Electric Heaters

Part No.	Voltage	Watts	Thermostat Voltage	Temperature Range	Watt Density	Hazardous Area Rating	Reservoir Size: pints (liters)	Number of Heaters Required
564058	115	150	115/230	-100°F to 500°F (38°C to 260°C)	20w/in^2	Class 1 Group D	4 (1.89)	N/A*
							6 (2.84)	1
							8 (3.79)	1
							12 (5.68)	1
							16 (7.57)	2
							24 (11.36)	2
							32 (15.14)	3
							40 (18.93)	3
557207	12	200	120	60°F to 240°F (16°C to 116°C)	22w/in^2	Class 1 Group B	4 (1.89)	N/A*
							6 (2.84)	1
							8 (3.79)	1
							12 (5.68)	1
							16 (7.57)	2
							24 (11.36)	2
							32 (15.14)	3
							40 (18.93)	3

**Electric heaters are not available on 4 pint reservoir sizes.*

*Electric Heater 557207 cannot be used with the following configurations: MBB3-5**, MBC3-5**, MBD3-5**, MBJ3-5**, MBK3-5**, MBL3-5**.*

Other Accessories

Part No.	Description	Special Features/Notes
563005	Drive Arm	For use with End Ratchet Drives. Option D, Codes B or F, page 2
559037	Gravity Supply	Mounted in the last pump station opposite drive.
		Exception is when an Alarm Pump is used, then this option is mounted in the second to the last pump station.
563026	Pressurized Supply	Mounted in the last pump station opposite drive.
		Exception is when an Alarm Pump is used, then this option is mounted in the second to the last pump station.
563013	Low Level Switch	Single-pole, double-throw.
		Explosion Proof Class 1 Group C & D.
		Explosion Proof Class 2 Group E, F & G.
		Mounted in the last pump station opposite drive.
		Exception is when an Alarm Pump is used, then this option is mounted in the second to the last pump station.
564015	Low Level Switch	Single-pole, single-throw.
		N.C. Electric Rating is 10 watts @ 120 VAC (minimum).
		Mounted in the last pump station opposite drive.
		Exception is when an Alarm Pump is used, then this option is mounted in the second to the last pump station.

Technical Data

Modular Box Lubricator		
	US	**Metric**
Pump Size	**Maximum Outlet Pressure**	**Maximum Outlet Pressure**
3/16”	7500 psi	51.71 MPa 517.1 bar
1/4”	6000 psi	41.37 MPa 413.7 bar
3/8”	2500 psi	17.24 MPa 172.4 bar
Temperature		
Operating Temperature Range	-20°F to 140°F	(-29°C to 60°C)
Fluid Viscosity		
Dispensing Fluid Viscosity	80 to 5000 SUS	
Materials of Constructions		
Wetted Materials	spring steel, carbon steel, stainless steel, nylon, fluoroelastomer	
Drive Speed		
Drive Speed	3 to 50 rpm	
Noise (dBa)**		
Maximum sound pressure	74 dBa	
Notes		
***Sound pressure measured at the work station with 3/8” pumps running at 50 rpm with 3500 psi (24.13 MPa, 241.3 bar) working pressure*		

Reservoir and Mounting Dimensions

Dimensions are shown in inches (mm).

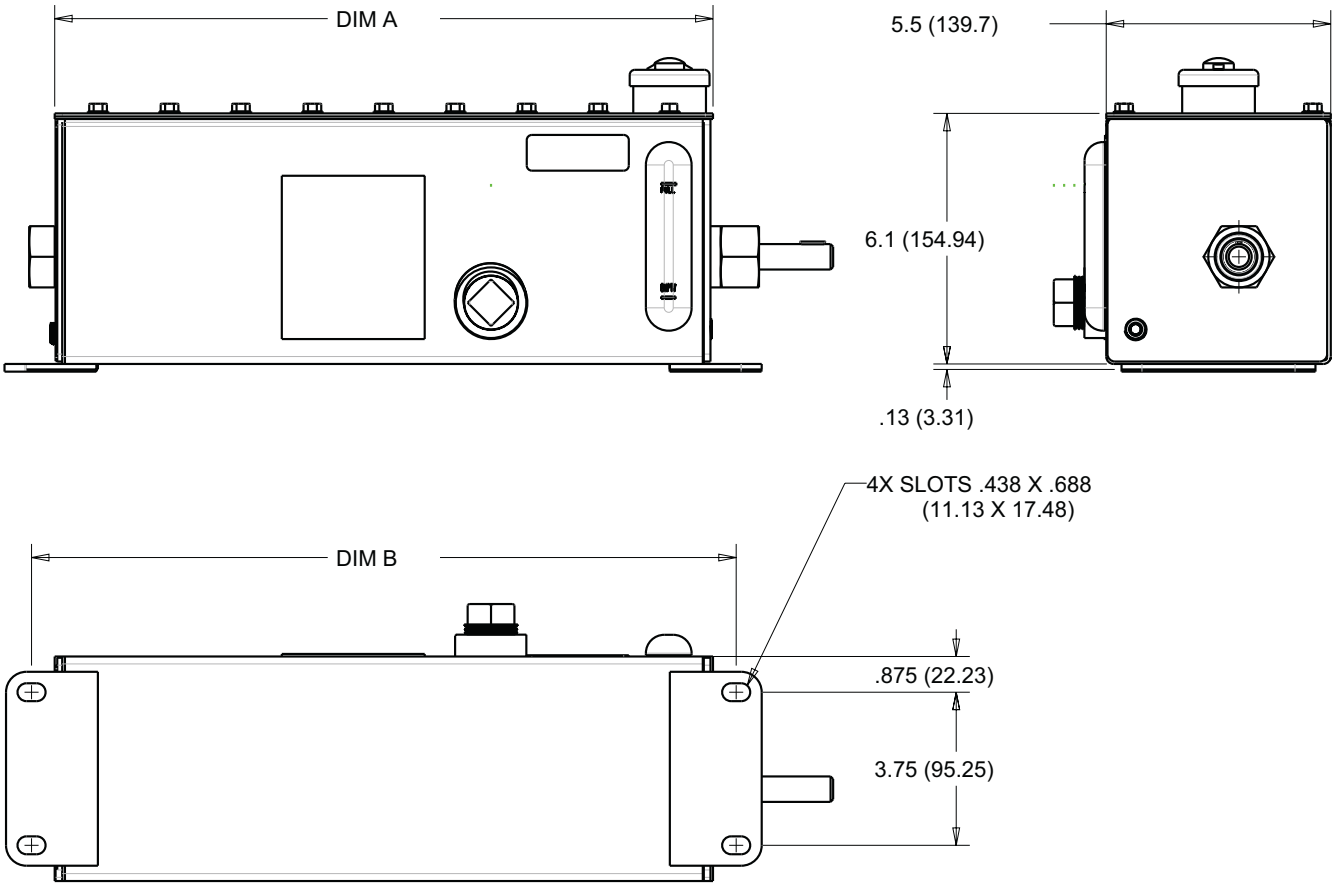

Dimensions: All Reservoirs

Option A Code	Reservoir Size Pints (Liters)	Dimension A Inch (mm)	Dimension B Inch (mm)
A or J	4 (1.89)	5.63 (143.0)	6.89 (175.0)
B or K	6 (2.84)	7.38 (187.4)	8.64 (219.5)
C or L	8 (3.79)	10.88 (276.4)	12.14 (308.4)
D or M	12 (5.68)	16.13 (409.7)	17.39 (441.7)
E or N	16 (7.57)	23.13 (587.5)	24.39 (619.5)
F or P	24 (11.36)	30.13 (765.3)	31.39 (797.3)
G or R	32 (15.14)	37.13 (943.1)	38.39 (975.1)
H or S	40 (18.93)	44.13 (1120.9)	45.39 (1152.9)

Drive Options and Dimensions

Dimensions are shown in inches (mm).

Refer to the Part Number Key, page 2 to determine your specific drive.

Direct End Rotary

Option D, Code A or E (page 2) - Option D, Code A shown.

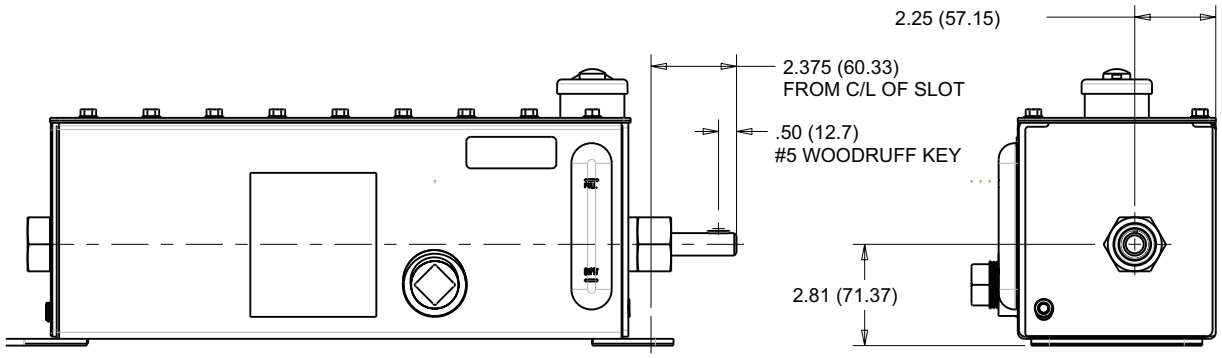

End Ratchet

Option D, Code B or F (page 2) - Option D, Code B shown

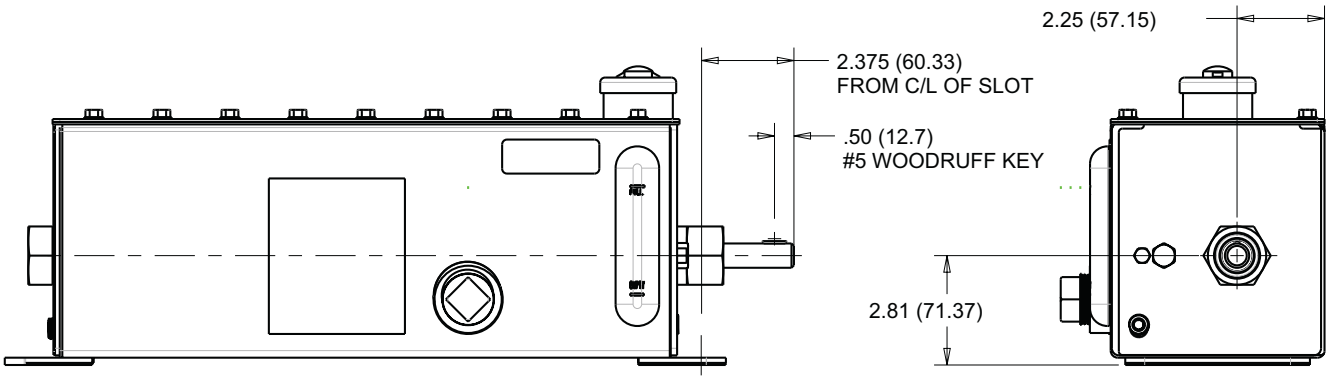

End Rotary Ratchet

Option D, Code C, D, G, or H (page 2) - Option D, Code C or D shown

Code	Ratio	Max Input Speed
C or G	37.5:1	800 rpm
D or H	75:1	800 rpm

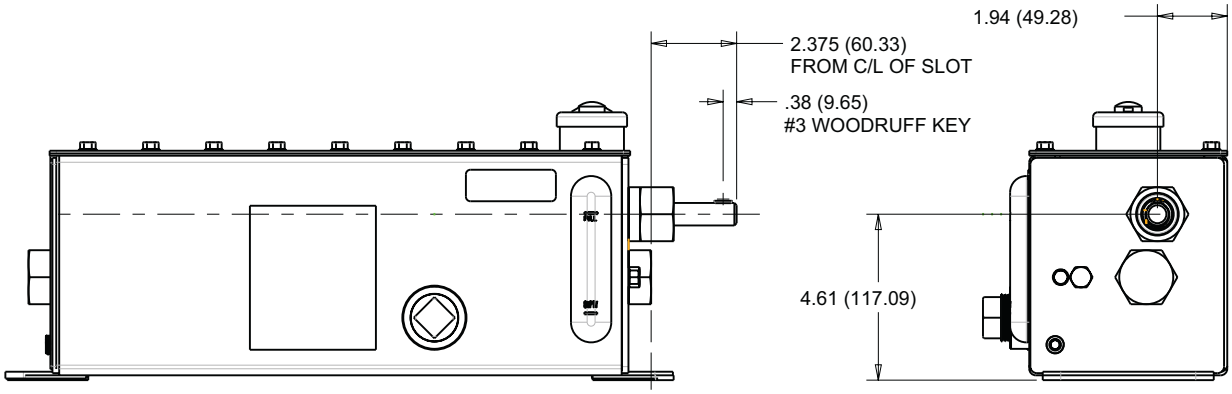

Double Reduction End Rotary

Option D, Code J - N (page 2) - Option D, Code J-N shown

Code	Ratio
J	25:1
K	50:1
L	100:1
M	200:1
N	300:1

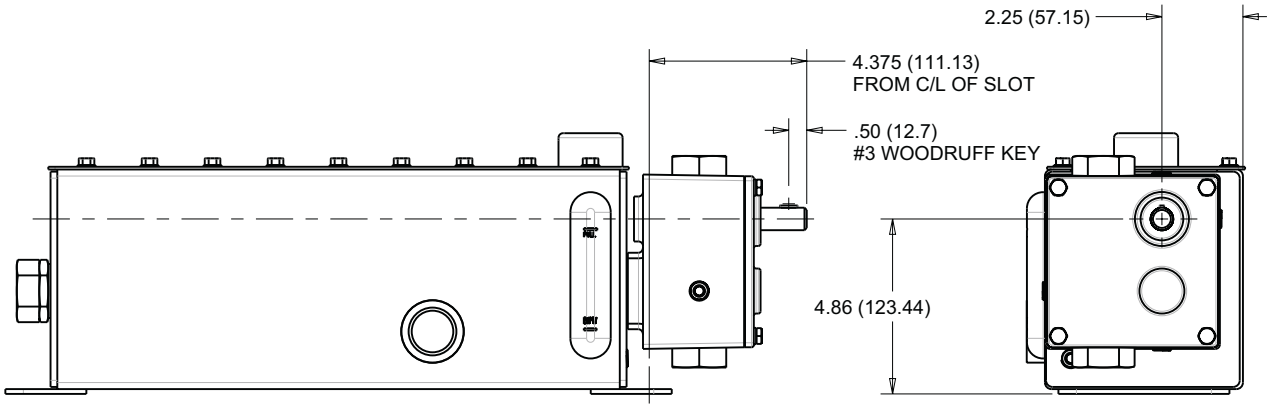

Angle Rotary Drive

Option D, Code P - T and Z (page 2)

Code	Ratio
P	25:1
R	50:1
S or Z	188:1
T	375:1

Right Hand Rear Drive Option D, Code P-T Shown

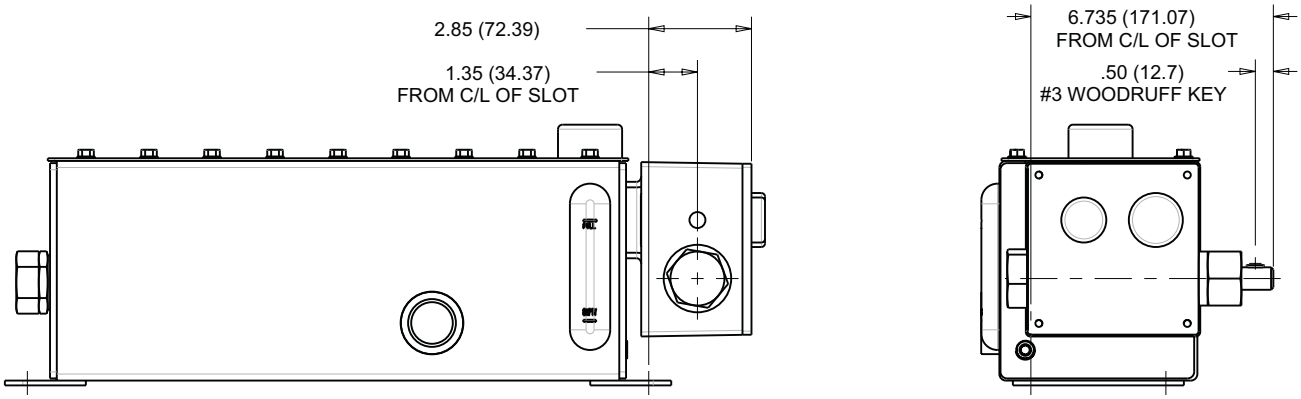

Left Hand Rear Drive Option D, Code Z Shown

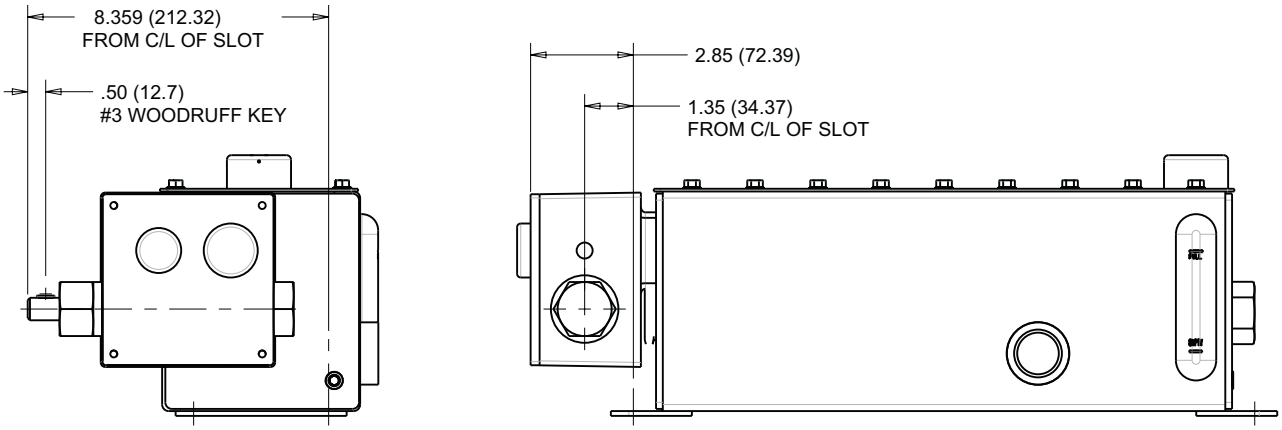

Gear Reducer

Option D, Code U - Y (page 2) - Option D, Code U-Y shown

Code	Ratio
U	100:1
V	150:1
W	200:1
X	300:1
Y	400:1

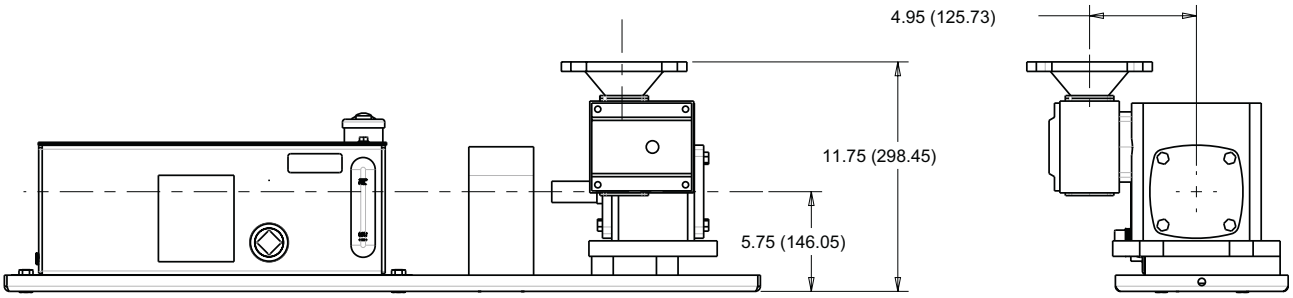

Motor Mounting Bases and Dimensions

Dimensions are shown in inches (mm).

Refer to the Part Number Key, page 2 to determine your specific mounting base.

Motor Mounting Bases

Option A, Code J - N (page 2) - These selections may only be used with double reduction end rotary type drives, Option D, Code J - N.

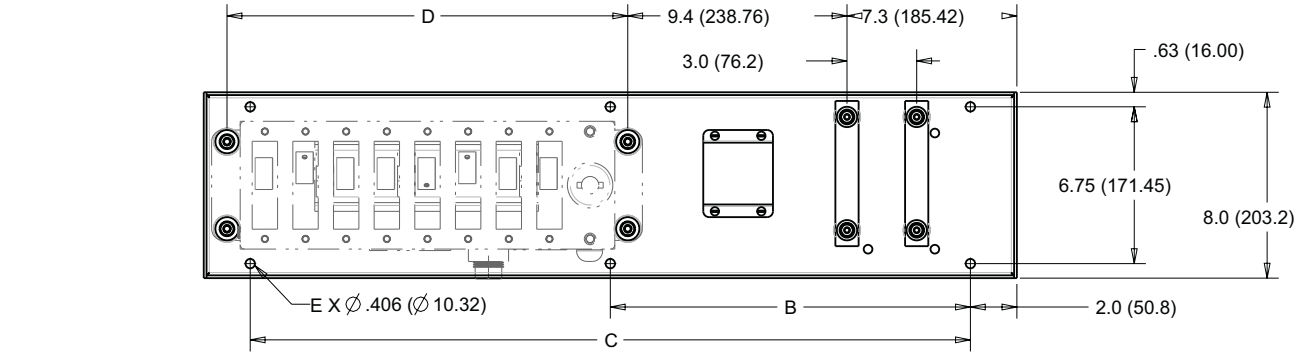

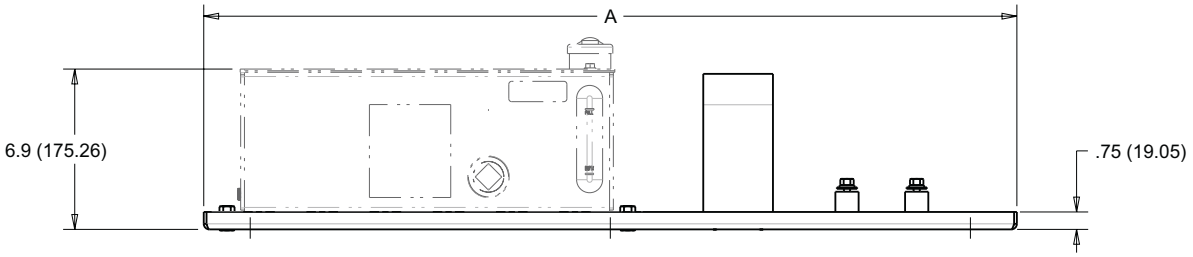

Dimensions

Option A Code	Description Pints (liters)	Dimension A Inch (mm)	Dimension B Inch (mm)	Dimension C Inch (mm)	Dimension D Inch (mm)	Quantity E
J	Base, Drip Pan 4 (1.89)	24.50 (622.3)	20.50 (520.7)		6.75 (171.5)	4
K	Base, Drip Pan 6 (2.84)	26.25 (666.7)	22.25 (564.1)		8.50 (215.9)	4
L	Base, Drip Pan 8 (3.79)	29.75 (755.6)	25.75 (654.0)		12.00 (304.8)	4
M	Base, Drip Pan 12 (5.68)	35.00 (899.0)	15.50 (393.7)	31.00 (787.4)	17.25 (438.1)	6
N	Base, Drip Pan 16 (7.57)	42.00 (1066.8)	19.00 (482.6)	38.00 (965.2)	24.25 (615.9)	6

Motor Mounting Bases

Option A, Code P - S (page 2) - These selections may only be used with gear reducer type drives, Option D, Code U-Y.

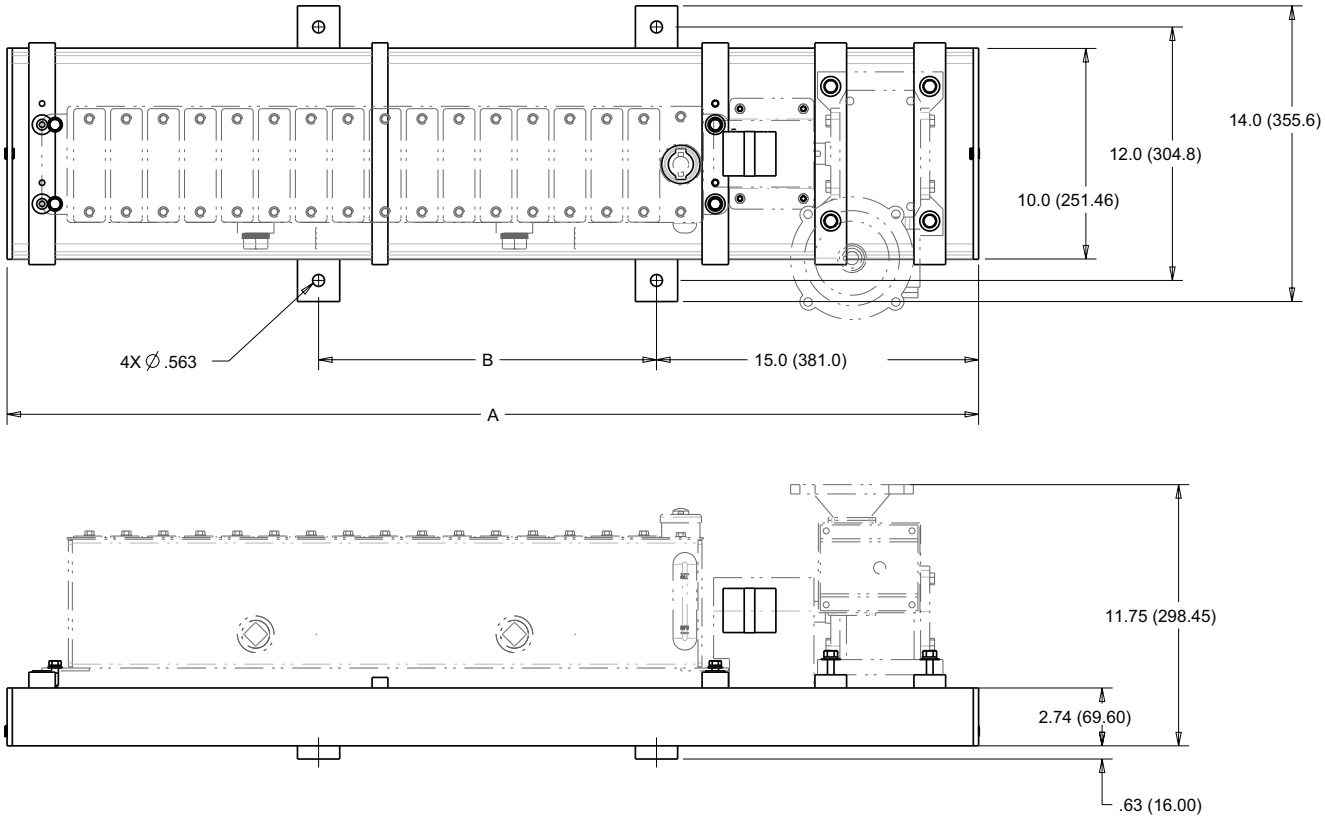

Dimensions

Option A Code	Description Pint (liters)	Dimension A Inch (mm)	Dimension B Inch (mm)
P	Base, Drip Pan 24 (11.36)	46.00 (1168.4)	16.00 (406.4)
R	Base, Drip Pan 32 (15.14)	53.00 (1346.2)	23.00 (584.2)
S	Base, Drip Pan 40 (18.93)	60.00 (1524.0)	30.00 (762.0)

Level Controller Dimensions

Dimensions are shown in inches (mm).

Refer to part number key, page 2 to determine your specific level controller.

RENS Level Controller

Option B, Code 4 - 6 (page 2) - Automatic fill option. Does not require a pump station for mounting. Mounted only on the front of the reservoir. Requires a maximum inlet pressure of 5 psi (0.03 MPa, 0.34 bar).

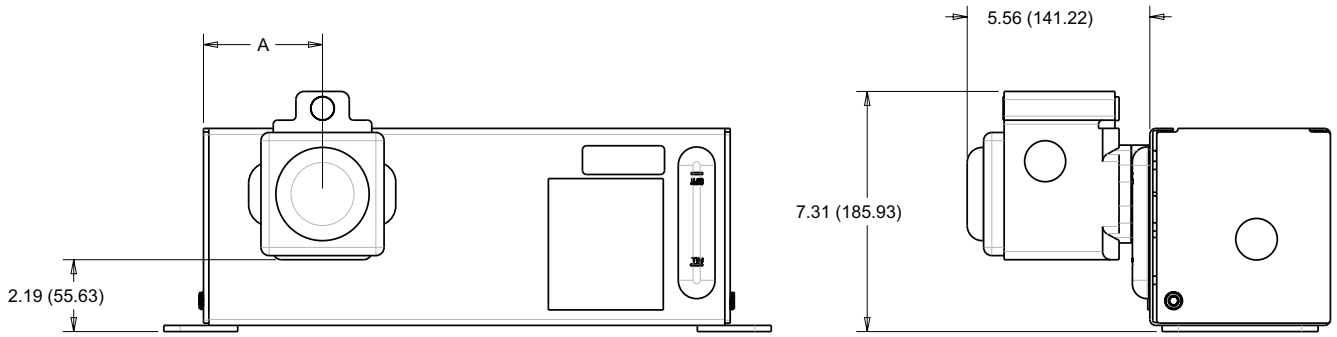

Dimensions

Option A Code	Reservoir Size Pints (Liters)	Dimension A Inch (mm)
A or J	4 (1.89)	1.00 (25.4)
B or K	6 (2.84)	2.75 (69.8)
C or L	8 (3.79)	3.63 (92.2)
D or M	12 (5.68)	3.63 (92.2)
E or N	16 (7.57)	11.50 (292.1)
F or P	24 (11.36)	15.00 (381.0)
G or R	32 (15.14)	12.38 (314.4)
H or S	40 (18.93)	14.13 (358.9)

GARZO Level Controller

Option B, Code 7 - 9 (page 2) - Automatic fill option. Mounts on the front of the reservoir. Requires a 0 - 70 psi (0-0.48 MPa, 0 - 4.82 bar) inlet supply. Switch actuates when a 1/2 to 3/4 loss of oil level occurs in the controller.

ELECTRICAL DATA

Contacts: Single Pole, Double-Throw
Contact Rating: 15 amps at 115/230 or 480 VAC
0.5 amps at 125 VDC
0.25 amps at 250 VDC
Switch Rating: Class 1, Group D

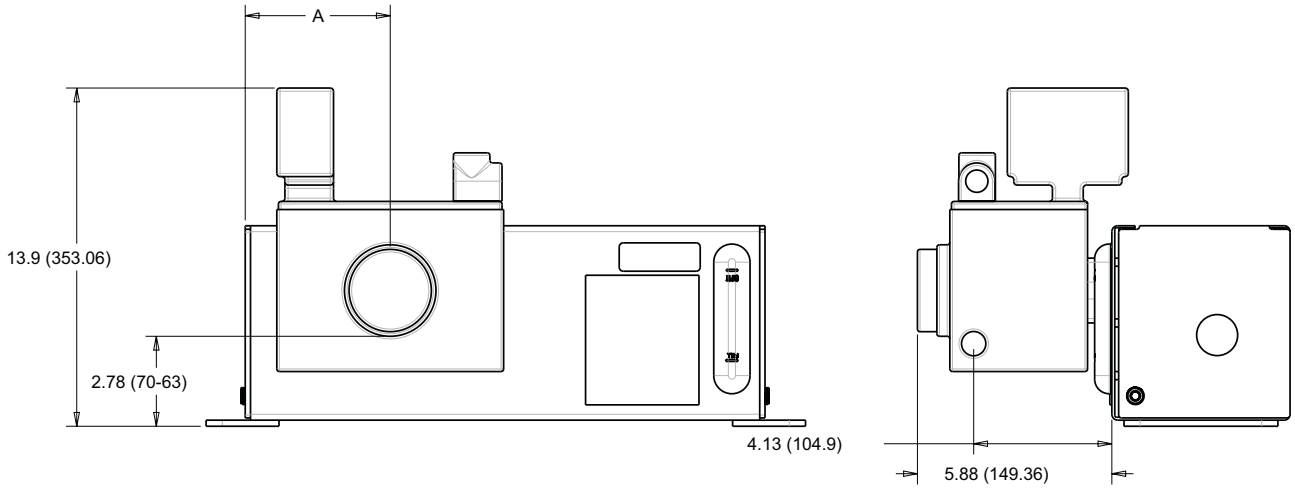

Dimensions

Option A Code	Reservoir Size Pints (Liters)	Dimension A Inch (mm)
A or J	4 (1.89)	1.00 (25.4)
B or K	6 (2.84)	2.75 (69.8)
C or L	8 (3.79)	3.63 (92.2)
D or M	12 (5.68)	3.63 (92.2)
E or N	16 (7.57)	11.50 (292.1)
F or P	24 (11.36)	15.00 (381.0)
G or R	32 (15.14)	12.38 (314.4)
H or S	40 (18.93)	14.13 (358.9)

Notes

Graco Standard Warranty

Graco warrants all equipment referenced in this document which is manufactured by Graco and bearing its name to be free from defects in material and workmanship on the date of sale to the original purchaser for use. With the exception of any special, extended, or limited warranty published by Graco, Graco will, for a period of twelve months from the date of sale, repair or replace any part of the equipment determined by Graco to be defective. This warranty applies only when the equipment is installed, operated and maintained in accordance with Graco's written recommendations.

This warranty does not cover, and Graco shall not be liable for general wear and tear, or any malfunction, damage or wear caused by faulty installation, misapplication, abrasion, corrosion, inadequate or improper maintenance, negligence, accident, tampering, or substitution of non-Graco component parts. Nor shall Graco be liable for malfunction, damage or wear caused by the incompatibility of Graco equipment with structures, accessories, equipment or materials not supplied by Graco, or the improper design, manufacture, installation, operation or maintenance of structures, accessories, equipment or materials not supplied by Graco.

This warranty is conditioned upon the prepaid return of the equipment claimed to be defective to an authorized Graco distributor for verification of the claimed defect. If the claimed defect is verified, Graco will repair or replace free of charge any defective parts. The equipment will be returned to the original purchaser transportation prepaid. If inspection of the equipment does not disclose any defect in material or workmanship, repairs will be made at a reasonable charge, which charges may include the costs of parts, labor, and transportation.

THIS WARRANTY IS EXCLUSIVE, AND IS IN LIEU OF ANY OTHER WARRANTIES, EXPRESS OR IMPLIED, INCLUDING BUT NOT LIMITED TO WARRANTY OF MERCHANTABILITY OR WARRANTY OF FITNESS FOR A PARTICULAR PURPOSE.

Graco's sole obligation and buyer's sole remedy for any breach of warranty shall be as set forth above. The buyer agrees that no other remedy (including, but not limited to, incidental or consequential damages for lost profits, lost sales, injury to person or property, or any other incidental or consequential loss) shall be available. Any action for breach of warranty must be brought within two (2) years of the date of sale.

GRACO MAKES NO WARRANTY, AND DISCLAIMS ALL IMPLIED WARRANTIES OF MERCHANTABILITY AND FITNESS FOR A PARTICULAR PURPOSE, IN CONNECTION WITH ACCESSORIES, EQUIPMENT, MATERIALS OR COMPONENTS SOLD BUT NOT MANUFACTURED BY GRACO. These items sold, but not manufactured by Graco (such as electric motors, switches, hose, etc.), are subject to the warranty, if any, of their manufacturer. Graco will provide purchaser with reasonable assistance in making any claim for breach of these warranties.

In no event will Graco be liable for indirect, incidental, special or consequential damages resulting from Graco supplying equipment hereunder, or the furnishing, performance, or use of any products or other goods sold hereto, whether due to a breach of contract, breach of warranty, the negligence of Graco, or otherwise.

FOR GRACO CANADA CUSTOMERS
The Parties acknowledge that they have required that the present document, as well as all documents, notices and legal proceedings entered into, given or instituted pursuant hereto or relating directly or indirectly hereto, be drawn up in English. Les parties reconnaissent avoir convenu que la rédaction du présente document sera en Anglais, ainsi que tous documents, avis et procédures judiciaires exécutés, donnés ou intentés, à la suite de ou en rapport, directement ou indirectement, avec les procédures concernées.

Graco Information

For the latest information about Graco products, visit www.graco.com.

TO PLACE AN ORDER, contact your Graco distributor or call to identify the nearest distributor.
Phone: 612-623-6928 **or Toll Free:** 1-800-533-9655, **Fax:** 612-378-3590

All written and visual data contained in this document reflects the latest product information available at the time of publication. Graco reserves the right to make changes at any time without notice.

For patent information, see www.graco.com/patents.

Original instructions. This manual contains English. MM 3A2100

Graco Headquarters: Minneapolis
International Offices: Belgium, China, Japan, Korea

GRACO INC. AND SUBSIDIARIES • P.O. BOX 1441 • MINNEAPOLIS MN 55440-1441 • USA

Copyright 2012, Graco Inc. All Graco manufacturing locations are registered to ISO 9001.
www.graco.com
Revised December 2012